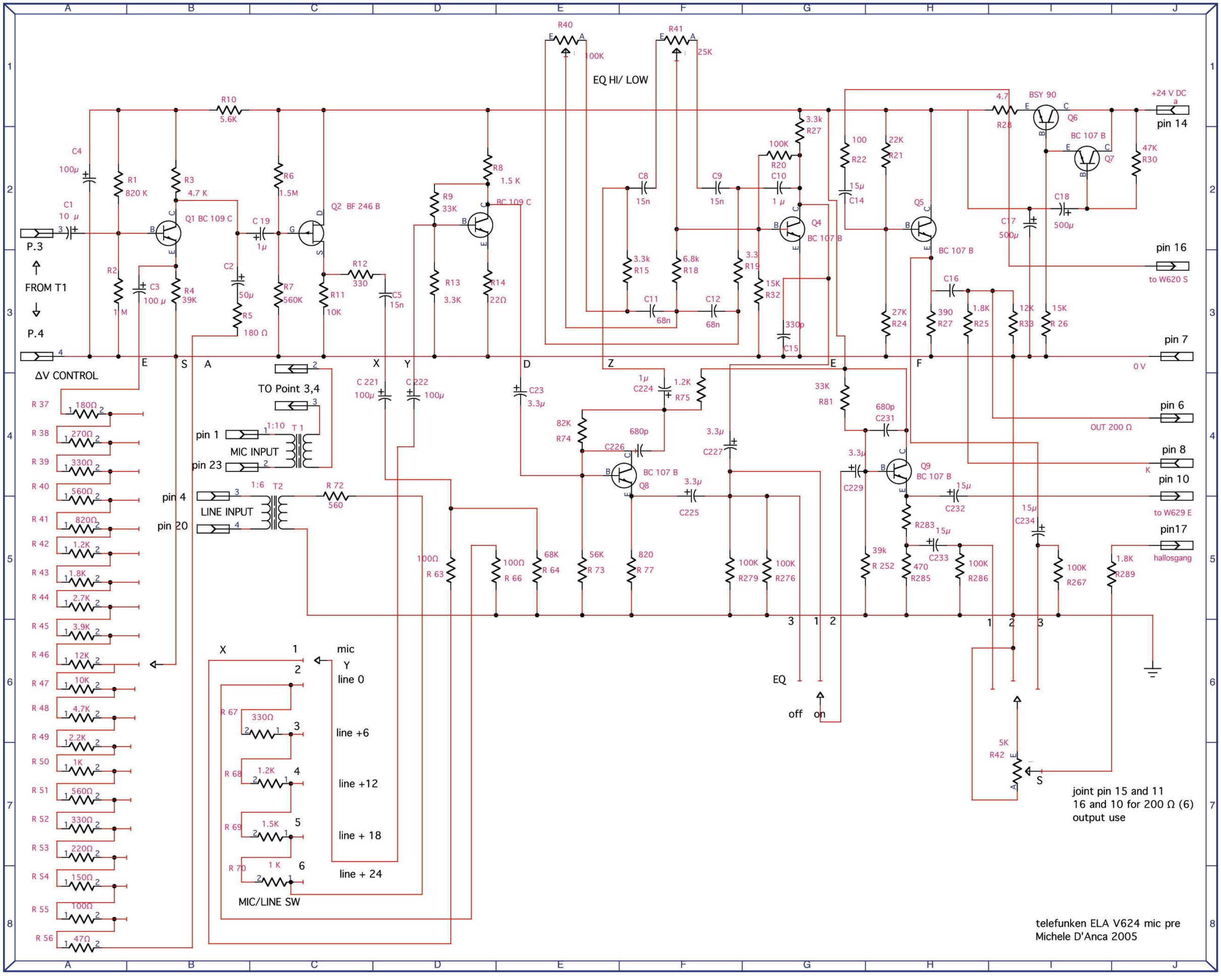
EQ HI/ LOW
R40 100K
R41 25K
R10 5.6K
C4 100µ
R1 820 K
R3 4.7 K
R6 1.5M
Q2 BF 246 B
R8 1.5 K
BC 109 C
R9 33K
C1 10 µ
P.3
FROM T1
P.4
Q1 BC 109 C
C 19 1µ
R2 1 M
C3 100 µ
R4 39K
C2 50µ
R5 180 Ω
R7 560K
R11 10K
R12 330
C5 15n
R13 3.3K
R14 22Ω
C8 15n
C9 15n
R20 100K
C10 1 µ
R27 3.3k
Q4 BC 107 B
R15 3.3k
R18 6.8k
R19 3.3
R32 15K
C11 68n
C12 68n
C15 330p
R22 100
C14 15µ
R21 22K
Q5 BC 107 B
R24 27K
R28 4.7
BSY 90 Q6
BC 107 B Q7
R30 47K
C17 500µ
C18 500µ
C16
R27 390
R25 1.8K
R33 12K
R 26 15K
+24 V DC
pin 14
pin 16
to W620 S
pin 7
0 V
pin 6
OUT 200 Ω
pin 8
pin 10
to W629 E
pin17
hallosgang
ΔV CONTROL
R 37 180Ω
R 38 270Ω
R 39 330Ω
R 40 560Ω
R 41 820Ω
R 42 1.2K
R 43 1.8K
R 44 2.7K
R 45 3.9K
R 46 12K
R 47 10K
R 48 4.7K
R 49 2.2K
R 50 1K
R 51 560Ω
R 52 330Ω
R 53 220Ω
R 54 150Ω
R 55 100Ω
R 56 47Ω
TO Point 3,4
pin 1
MIC INPUT
pin 23
T 1 1:10
pin 4
LINE INPUT
pin 20
T2 1:6
R 72 560
C 221 100µ
C 222 100µ
C23 3.3µ
1µ C224
R75 1.2K
82K R74
680p C226
BC 107 B Q8
C225 3.3µ
C227 3.3µ
33K R81
680p C231
C229 3.3µ
Q9 BC 107 B
C232 15µ
R283
C233 15µ
C234 15µ
39k R 252
470 R285
100K R286
100K R267
1.8K R289
100Ω R 63
100Ω R 66
68K R 64
56K R 73
820 R 77
100K R279
100K R276
EQ
off on
5K R42
S
joint pin 15 and 11
16 and 10 for 200 Ω (6)
output use
X
Y
mic
line 0
line +6
line +12
line + 18
line + 24
R 67 330Ω
R 68 1.2K
R 69 1.5K
R 70 1 K
MIC/LINE SW
telefunken ELA V624 mic pre
Michele D'Anca 2005